ARIES SYSTEM 300 MUSIC SYNTHESIZER

Module AR-328

STEREO REVERB & OUTPUT ASSEMBLY INSTRUCTIONS

The previous pages were written as a general guide to familiarize the builder with the components. Here, now, are the specific assembly instructions for building your stereo reverb .output · module. It is recommended that you do the following before you proceed:

Find a place where you can work through completion, without disturbing your set-up.
Use adequate lighting.
Wash your hands before starting. This removes contaminating oils and perspiration and makes assembly more comfortable.
As you proceed, check off each step with a pencil.

( ) 1. Preparation:
Lay the circuit board down on a sheet of white paper. PLACE METAL FOIL SIDE DOWN! Turn board so that connector strip is to the left.
Lay the assembly drawing down near the board.
Unpack the parts carefully and place in a large box or tray so they won't get lost.
Have the following tools nearby:
Pencil tip soldering iron, hot and tinned (solder coated)
Solder; Use only thin rosin-core solder!
Small, diagonal wire cutters
Small wire strippers
Small long-nose pliers
Flat blade screw driver
½" or #16 nut driver
3/8" or #12 nut driver
¼" or #8 nut driver
A pair of regular pliers can substitute for the nut drivers but will not be as easy to use.

( ) 2. Resistors:
Carefully install all 40 resistors on the circuit board (R1 through R7 are potentiometers and will later be mounted on the panel). R8 through R14 are ¼ watt resistors and will be mounted on the potentiometers on the front panel. To avoid breaking the resistor leads, bend leads at least 1/16 of an inch away from the body of the resistor.
For example:

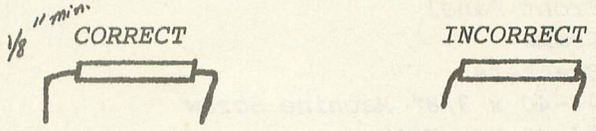

( ) 3. Intergrated Circuit Amplifiers: Install all 3 (U1 thru U3)

( ) 4. Capacitors 14:
Install all capacitors on the circuit board. (C1 thru C14) Observe polarity. If there is no band or polarity marking, the capacitor may be installed in either direction.

( ) 5. Transistors 4:
Install all 4 transistors on the circuit board. (Q1 thru Q4) The general shape of the transistor may vary from that shown on the assembly drawing. To be sure, check each transistor type on pages 4-6 of the introduction, and make sure the correct letters (E,B,C) are in the proper holes.

Scan by Manual Manor
http://www.markglinsky.com/ManualManor.html

( ) 6. Diodes: Install of 4 (CR1 thru CR4). Observe polarity
( ) 7. Trimpots: Install both 2.5K trimpots on the board R51, R56
AT THIS POINT, ALL THE BOARD COMPONENTS ARE MOUNTED.

MODULE ASSEMBLY--Please refer to Module Assembly Drawing
( ) 1. Unpack the frame, bag of hardware, and front panel.
( ) 2. Snap the two plastic card guides into the holes in the frame. Be sure that the pairs of tabs in the guides which hold the board point toward the rear of the frame. (The bottom one is shown installed in the drawing.)
( ) 3. Slide the circuit board into the frame, holding the top and bottom of the frame together against the board so that the board fits snugly in the card guides. Be sure that the pairs of plastic tabs pinch the edge of the circuit board properly.
( ) 4. Using 4-40 x 3/8" screws and nuts, mount the two angle brackets to the frame as shown in the drawing. The brackets should be entirely on the component side of the board.
( ) 5. Now screw the board to the brackets. Insert the 4-40 x 3/8" screw from the foil side of the board. DOUBLE CHECK THAT THE HEAD OF THE SCREW DOES NOT TOUCH ANY FOIL!!!
FRONT PANEL ASSEMBLY--Refer to panel wiring diagram
Now set the module frame aside and carefully unpack the front panel.
( ) 1.Install all 14 mini-phone jacks as shown in the panel drawing.
( ) 2. Install the two RCA out put jacks as shown.
( ) 3. Install the stereophone jack as shown.
( ) 4. Install the power switch as shown.
( ) 5. Install the pilot light through the front panel. Slide the rectangular lock washer over the pilot light from the rear, concave side toward the panel.
( ) 6. Install all six potentiometers as shown on the panel diagram. The two top most potentiometers R1 & R3 will be removed later when we attach the front panel to the module frame. Do not overly tighten these two pots. Put the locking washer over the shaft of the pot. Insert the pot shafts through the appropriate holes in the panel. Put on the nuts and tighten them very snugly, but avoid scratching the panel.
PANEL WIRING: Refer to panel wiring diagram & board assembly drawing.
( ) 1. Run an insulated wire from pin 2 of R7 to the grounds of all 17 jacks, to the appropriate terminals at each pot, and to shunt of each audio input jack, as shown. You may use either separate pieces of wire or one continuous piece, but it must be insulated between connections where shown. Connect another foot long piece of wire to pin 2 of R7. This will be connected later.
( ) 2. Run a wire connecting the tips of each set of four jacks labelled "patch" on the front panel.
( ) 3. Run a wire from the tip of the audio input jacks to pin 3 on the first input potentiometers R1, as shown. Connect audio input 2 to R2 in the same way.
( ) 4. Connect two 33K ohm resistors to pin 2, the center tap, of audio input pot 1. Connect the end of one resistor to pin 1 of PAN pot 1 (R3) and the end of the other resistor to pin 3 of PAN pot 1. Do the same to input 2. Insulate the leads of these resistors if they are likely to touch the front panel or the case of the pot. Connect a one foot long piece of insulated wire to pins 1 and 3 of each pot.
( ) 5. Connect a one foot long piece of insulated wire to pin 2 and 3 of each reverb level pot; (R5 & R6).
( ) 6. Connect a 33K ohm resistor from the tip of input jack 1 to pin 3 of the reverb source pot (R7). Connect a 33K ohm resistor from the tip of input jack 2 to pin 1 of the reverb source pot (R7). Connect a one foot long piece of insulated wire to pins 1 and 3.

Scan by Manual Manor
http://www.markglinsky.com/ManualManor.html

( ) 7. Run a wire connecting the tips of the two +10V jacks. Connect a one foot long piece of insulated wire to the tip of one of the jacks.

( ) 8. Run a wire connecting the tips of the two -10V output jacks. Connect a one foot long piece of insulated wire to the tip of one of the jacks.

( ) 9. Connect a one foot long piece of insulated wire to each of the RCA jacks and each of the terminals on the stereophone output jack.

( ) 10. Solder a 47K ohm resistor to one lead of the pilot light. Insulate this connection with electrical tape or heat shrinkable tubing. Connect the other end of the resistor to pin 2 of the power switch. The body of the resistor should be close to pin 2 (less than 1/8" away) to prevent the resistor lead touching another terminal or the case of the awitch.

( ) 11. Connect three 18 gauge wires, three feet long to pins 1,2 & 4 of the male Cinch-Jones plug supplied with the AR-322. Slip the cover over the wires but do not fasten until all of the wires have been connected to the front panel.

( ) 12. Connect the wire from pin 1 to the other lead of the pilot light. Solder this connection and insulate it with electrical tape or heat shrinkable tubing.

( ) 13. Connect the wire from pin 2 on the plug to pin 1 on the switch.

( ) 14. Connect the wire from pin 4 on the plug to pin 2 on the switch. Be careful that no loose strands of wire are touching the case of the switch or the other terminals. Wrap a piece of electrical tape around the switch to totally insulate these connections.

( ) 15. Place the cover on the plug.

( ) 16. Now complete the module construction by removing the two top most pots on the front panel R1 and R3 and mounting the top of the panel to the top of the module frame, using pots R1 and R3. Insert the pots shafts through the frame and then through the panel. Refasten the pots.

( ) 17. Attach the bottom of the panel to the frame using the remaining 4-40 screws and nuts.

( ) 18. Consulting the P.C. board assembly drawing, connect the wires from the front panel to the appropriate points on the P.C. board.

( ) 19. Turn all potentiometer shafts fully counter clockwise and mount the knobs pointing to the left most panel marking. Tighten knob screws.

( ) 20. Take the four shielded cables supplied and install an RCA plug on each. Insert the wires through the rectangular hole at the rear of the module frame on the same side that the components are mounted. Install the other end of the cables on the P.C. board at the appropriate points marked "in" and "out". Take a piece of masking tape or an address label and mark the plugs accordingly.

THIS COMPLETES ASSEMBLY OF YOUR AR-328 STEREO & OUTPUT MODULE

Reverb Trim Procedure:

Connect the reverb cables to reverb tanks. Observe that the cables from the reverb driver are connected to the reverb inputs and that the inputs to the reverb preamp on the P.C. board are connected to the reverb tank outputs. Supply power to the module. Using either a volt meter or a DC coupled oscilloscope, monitor the outputs of U3 with no input to the module. The outputs at pin 7 & 8 should be adjusted to +7.5V D.C. This biases the output in the middle of its voltage range and allows for equal positive and negative voltage swing.

Reverb Installation:

( ) 1. A 22 pin edge connector is supplied with your kit. This should be installed on the rear plane mounting bars and wired the way the others are: pin "A" to +15v, pin "M" to ground, pin "Z" to -15v. (Bottom pin should be pin "Z")

( ) 2. To connect the Cinch-Jones plug to the AR-322, be sure to run the cable from the AR-328 out over the top of the module frame, as far as possible from the reverb output cables.

( ) 3. There are 4 mounting holes on the bottom of each reverb tank. Slip the rubber grommets into these holes and mount them under the AR-328 and adjacent modules

Scan by Manual Manor
http://www.markglinsky.com/ManualManor.html

using the 3/4" long wood screws supplied. The output side of the tanks should be as far as possible from the AR-322.

( ) 4. Remount the AR-322 Power Supply by turning around end over end so power supply is as far as possible from reverb.

( ) 5. The AR-328 is very sensitive to stray electromagnetic fields such as those created by the AR-322 transformer, or by audio amplifiers. Be extreemly careful to keep the Ar-328 as far as possible from such sources.

Scan by Manual Manor
http://www.markglinsky.com/ManualManor.html

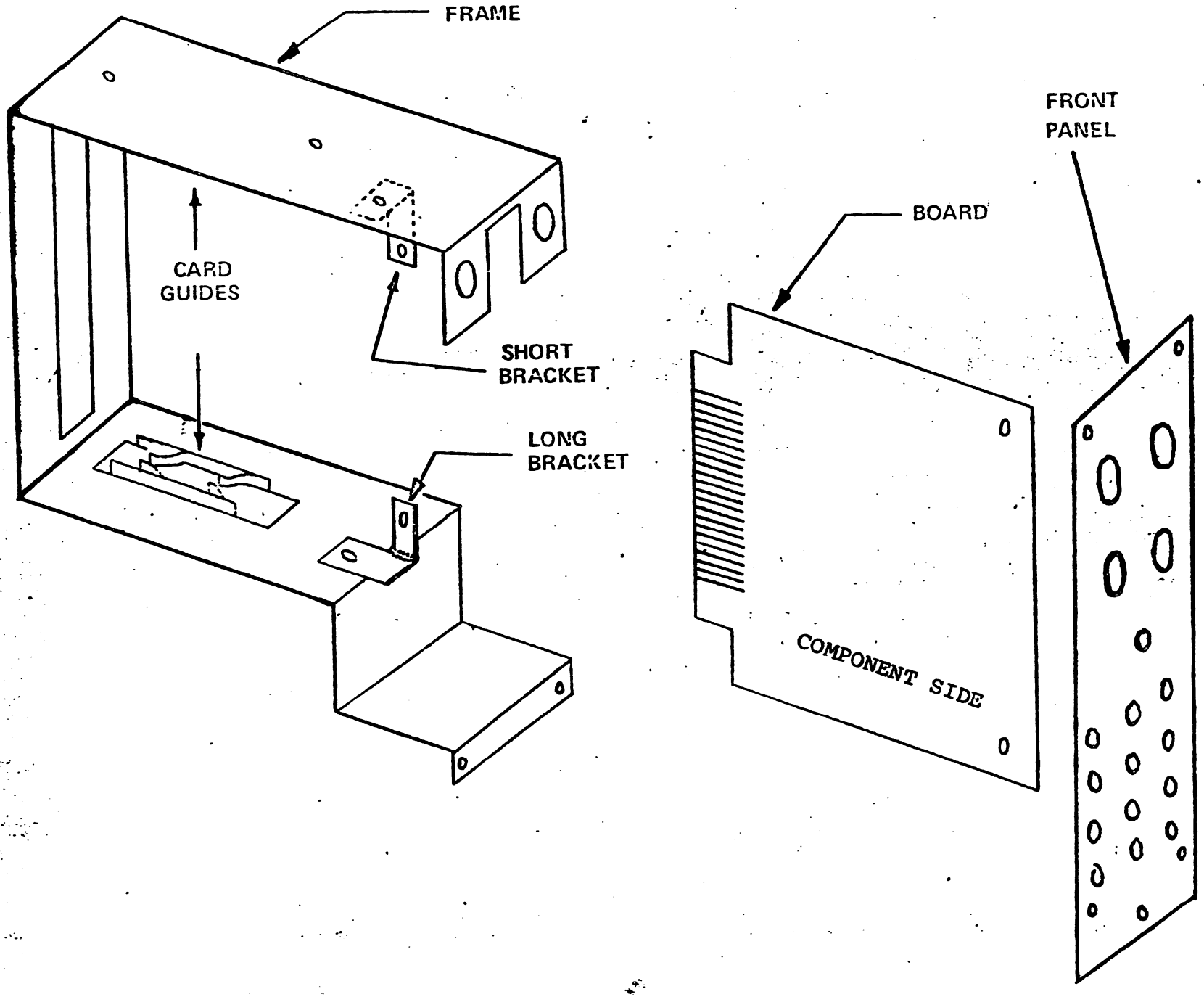

Scan by Manual Manor
http://www.markglinsky.com/ManualManor.html

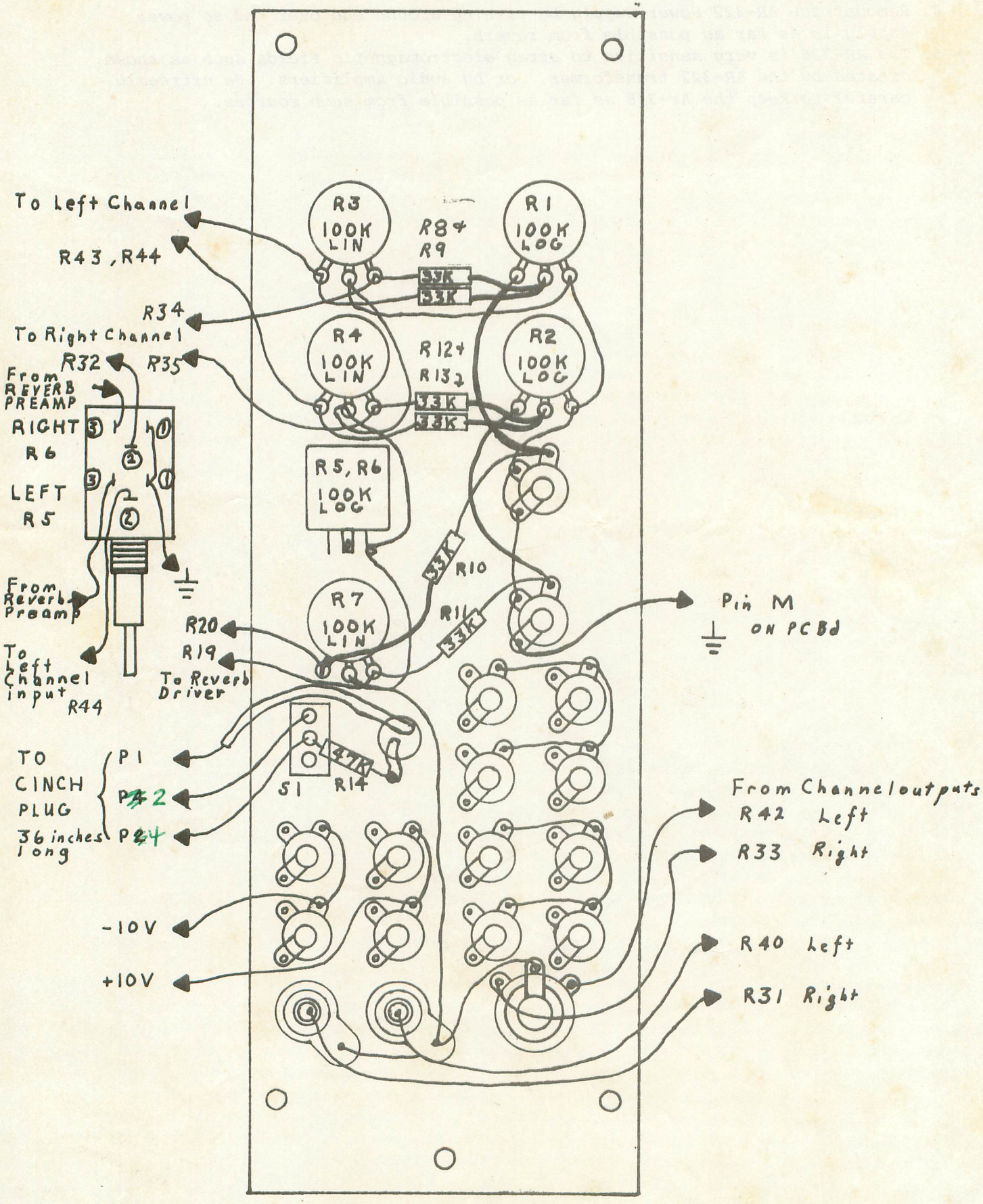

Scan by Manual Manor
http://www.markglinsky.com/ManualManor.html

PARTS LIST * AR-328 * STEREO REVERB & OUTPUT MODULE

NUMBER	QUANTITY	DESCRIPTION	VALUE AND RATINGS
	4	Capacitor, tantalum	1uf, 25V
	4	" "	10uf, 25V
	4	Capacitor, Electrolytic	35uf, 25V
	2	Capacitor, Disc	100pf, 25V
	8	Resistor, Carbon	33K, ¼watt
	12	Resistor, Carbon	100K, ¼ watt
	2	" "	2.2K, ¼ watt
	4	" "	100Ω ¼ watt
	4	" "	470Ω ¼ watt
	5	" "	47K, ¼ watt
	2	" "	120Ω ¼ watt
	2	" "	68K, ¼ watt
	2	" "	22K, ¼ watt
	2	" "	3.3K, ¼ watt
	2	" "	470Ω ½ watt
	2	NPN Transistor	A-3393
	2	PNP Transistor	2N3638
	2	Dual Operational Amplifier	MC1458
	1	Dual Low-Noise Pre-Amplifier	LM381N
	2	Trimpot (horiz. mtg.)	2.5K
	2	Cascade Reverb	
	1	Toggle Switch	SPDT
	2	Mini Rotary Pots	100K, Log.
	3	" " "	100K, Lin.
	1	Dual Concentric Pot	100K, Log.
	5	Knob; 1/8" shaft	
	1	Knob; concentric	
	1	22 pin edge connector	
	2	P.C. Card Guides	
	14	Mini phone jacks	
	2	R.C.A. (phono) jack	
	1	Stereo ¼" phone jack	
	1	Neon Lamp	
	1	Printed Circuit Board	
	1	Front Panel	
	1	Frame	
	2	Brackets	
	6	#4-40 x 3/8" Machine Screw	
	6	#4-40 Hex Nut	
	1	3' Length shielded cable	
	4	Male R.C.A. plug	
	8	Rubber Grommets	
	8	#6 x 3/4' Wood Screws	

Scan by Manual Manor
http://www.markglinsky.com/ManualManor.html

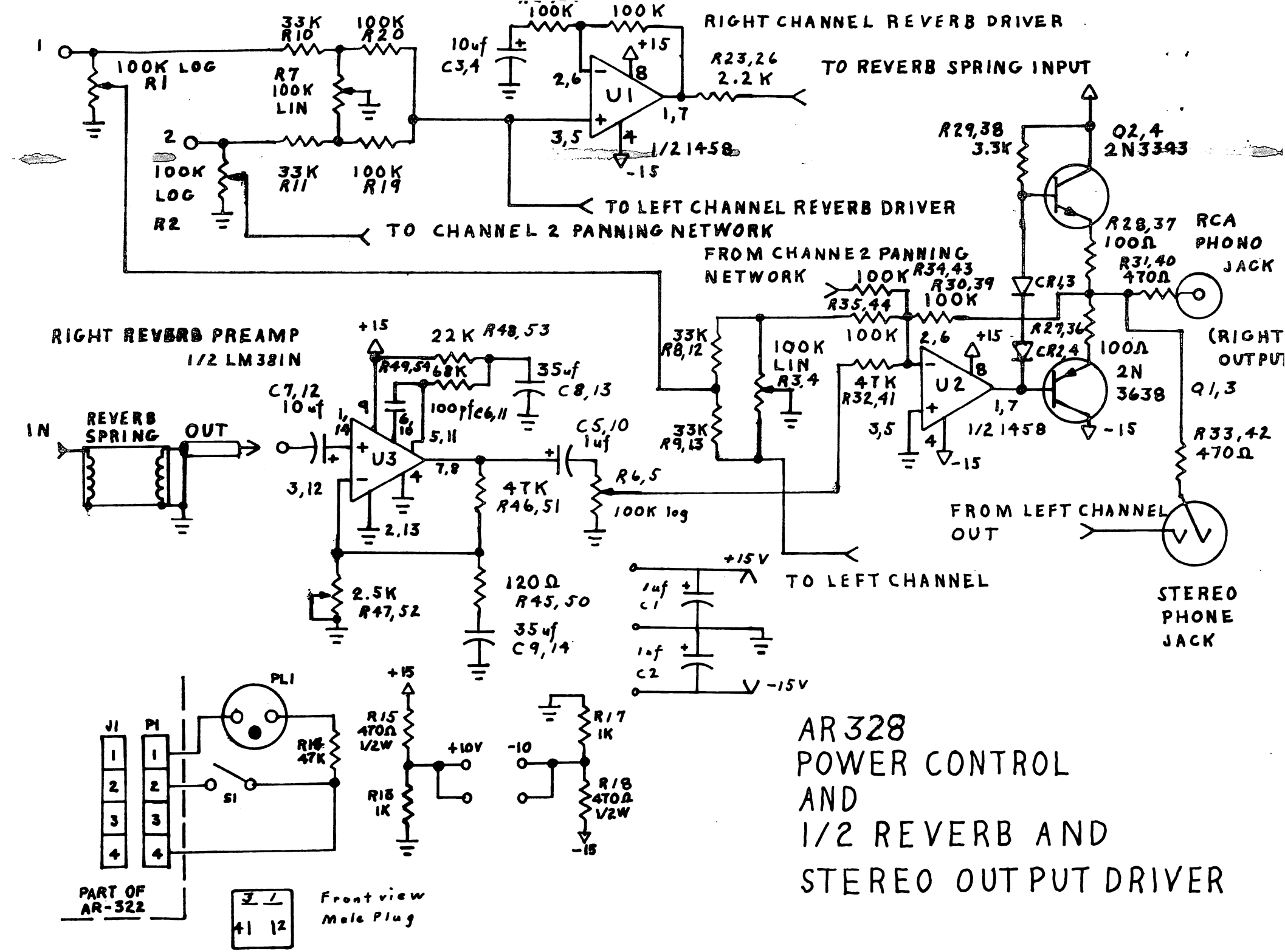

Scan by Manual Manor
http://www.markglinsky.com/ManualManor.html

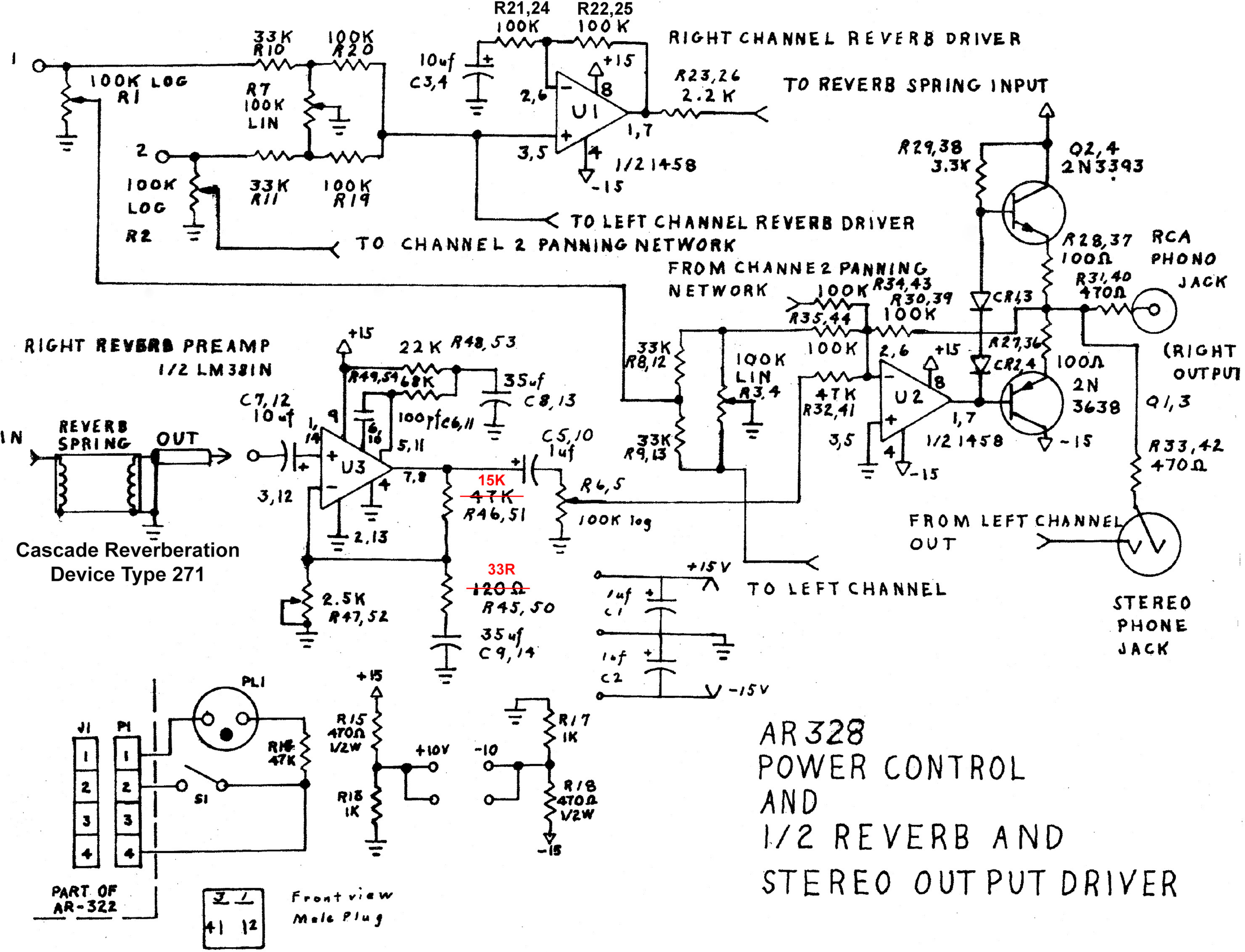

RIGHT CHANNEL REVERB DRIVER
TO REVERB SPRING INPUT
TO LEFT CHANNEL REVERB DRIVER
TO CHANNEL 2 PANNING NETWORK
FROM CHANNE 2 PANNING NETWORK
RIGHT REVERB PREAMP
1/2 LM381N
REVERB SPRING
OUT
IN
Cascade Reverberation Device Type 271
RCA PHONO JACK
(RIGHT OUTPUT
FROM LEFT CHANNEL OUT
STEREO PHONE JACK
TO LEFT CHANNEL
1/2 1458
2N3393
2N 3638
15K
47K
33R
120Ω
PART OF AR-322
Front view Male Plug
AR328
POWER CONTROL
AND
1/2 REVERB AND
STEREO OUTPUT DRIVER